2030 Érd, Kis-Duna Street 3 Hungary
www.tki-ferrit.com
sales@tki-ferrit.com
Phone:+3614220029

Coaxial Isolator

IC 1116 K

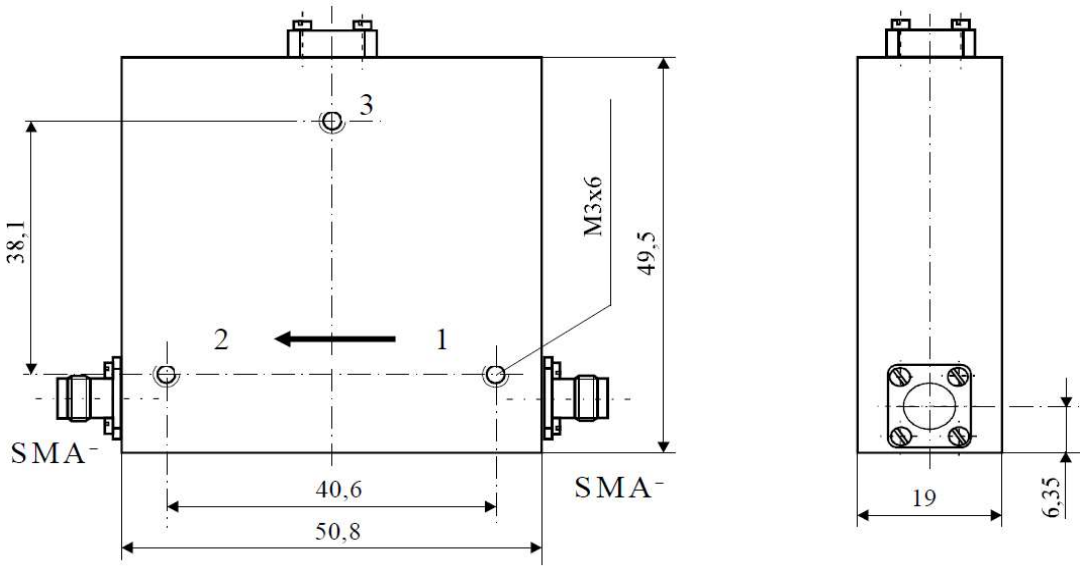

Electrical Specifications			
	Min	Max	Unit
Operating Frequency	1,1	1,6	GHz
Insertion Loss		0,5	dB
Isolation	17		dB
VSWR		1,33 :1	
Forward Power		25	W
Reverse Power		25	W

Mechanical Specifications	
Interface/ Connectors	SMA-
Direction	CW
Weight	175 g
Housing Material	AlMgSi; Steel
Surface	Conversion Coating; Ni-coated

Environmental Specifications		
Operating Temp. Range (°C)	-20	+70

©TKI-FERRIT 2021
The copyright in this document is vested in TKI-FERRIT Ltd.