2030 Érd, Kis-Duna Street 3 Hungary
www.tki-ferrit.com
sales@tki-ferrit.com
Phone:+3614220029

Coaxial Isolator

IC 9.2 bat

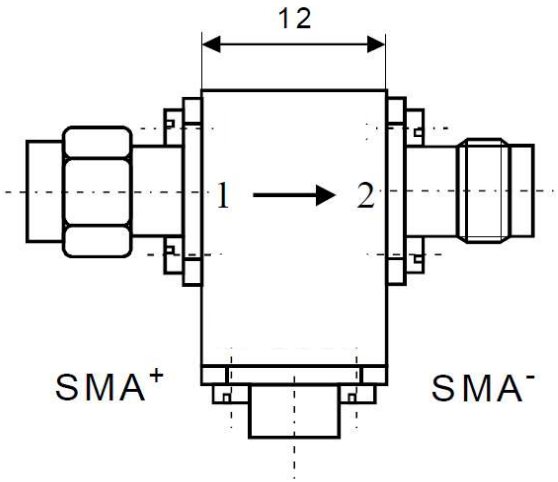

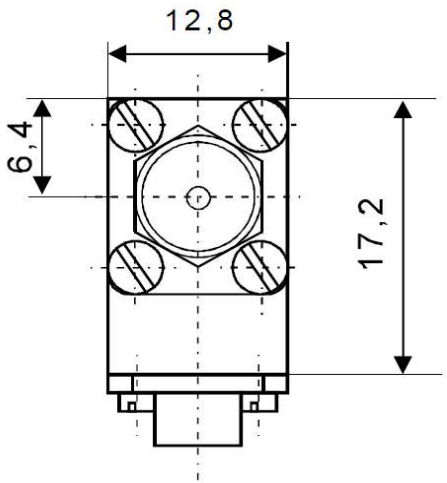

Electrical Specifications			
	Min	Max	Unit
Operating Frequency	8,9	9,5	GHz
Insertion Loss		0,4	dB
Isolation	20		dB
VSWR		1,17	
Forward Power		1	W
Reverse Power		1	W

Mechanical Specifications	
Interface/ Connectors	SMA-; +
Direction	CW
Weight	25 g
Housing Material	AlMgSi; Steel
Surface	Conversion Coating; Ni-coated

Environmental Specifications		
Operating Temp. Range (°C)	-10	+65

©TKI-FERRIT 2021
The copyright in this document is vested in TKI-FERRIT Ltd.